EN

ISOTRA®

PRODUCT SHEET

UNDERPLASTER PURENIT BOX

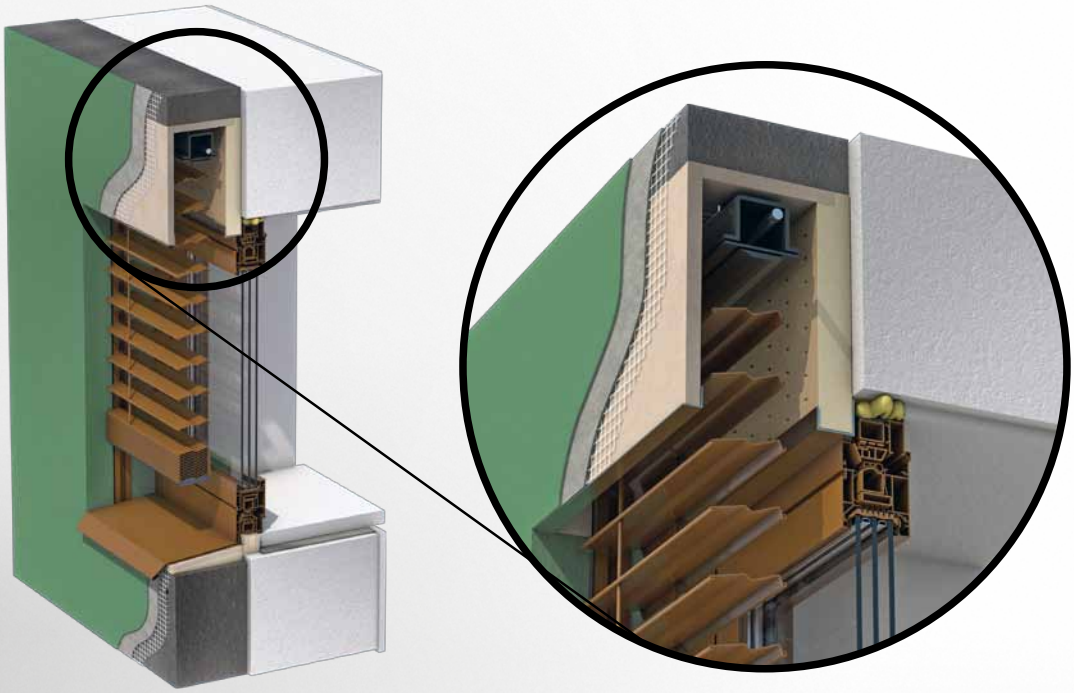

Contents

Basic product specifications 4
Variants of Purenitboxes 5
Composition of purenit boxes 6
Mounting console 7
Longitudinal section of purenit box 7
Connection of boxes 8
Prefabricated insulated lining 11
Instructions for measurement and installation 14

Products in this assortment group are always measured from the exterior.

Due to continuous development of our products, we reserve the right to slight differences in design from the illustrations.

ISOTRA *Quality*

A brand that represents many years of tradition, incalculable investments into own development, use of high-quality materials, technological advancement, competent work of hundreds of employees, and many other parameters constituting a composite whole – the final ISOTRA product

UNDERPLASTER PURENIT BOX

- modern and effective solution
- quick installation
- versatility - for new buildings and reconstructions

ISOTRA *Quality*

Basic product specifications

Purenit boxes are a modern and effective solution for installing exterior shading systems, such as exterior blinds and exterior roller shutters. The use of purenit boxes brings a number of advantages for the heat insulation of buildings and the aesthetic completion of building details. Purenit boxes create a hidden space for installing shading equipment without disturbing the appearance of the facade.

Advantages of using purenit boxes:

- Improving the energy efficiency of the building - reducing waste of heat.
- Protection of the structure - purenit protects building joints from moisture and deformation.
- Quick installation - purenit is light and easy to work with.
- Versatility – it can be used for various types of building solutions, from new buildings to renovations.

Purenit boxes are highly resistant to many influences (pressure, temperature, humidity, etc.), are solid and lightweight. Purenit is characterized by minimal thermal expansion and its fire resistance is B2 according to DIN 4102-1.

Box type	STANDARD DIMENSIONS (mm)							
	Box length D		Dimension A		Dimension B		Dimension C	
	Min.	Max.	Min.	Max.	Min.	Max.	Min.	Max.
PB	450	6000	150	600	140	300	150	600
PB-IS 20	450	6000	150	600	145	300	150	600
PB-IS 30	450	6000	150	600	155	300	150	600
PB-IS 40	450	6000	150	600	165	300	150	600
PB-IS 50	450	6000	150	600	175	300	150	600
PB-IS 60	450	6000	150	600	185	300	150	600
PB-L	450	6000	150	600	125	300	-	-

*Boxes longer than 3500 mm are assembled from multiple pieces – see Box connection

**For corner configurations, the maximum manufacturable width is 6000 mm for an internal corner, and 5700 mm for an external corner.

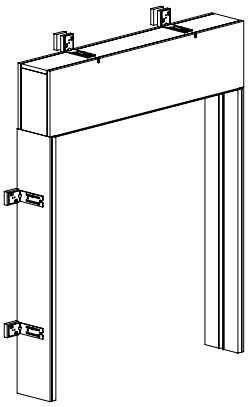

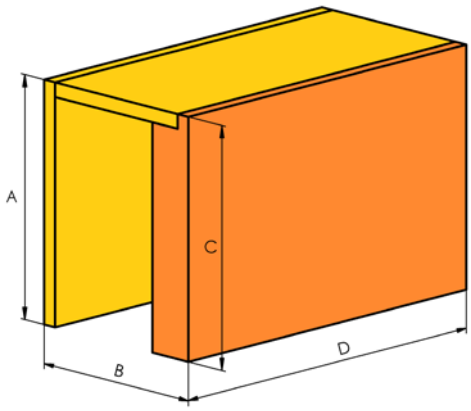

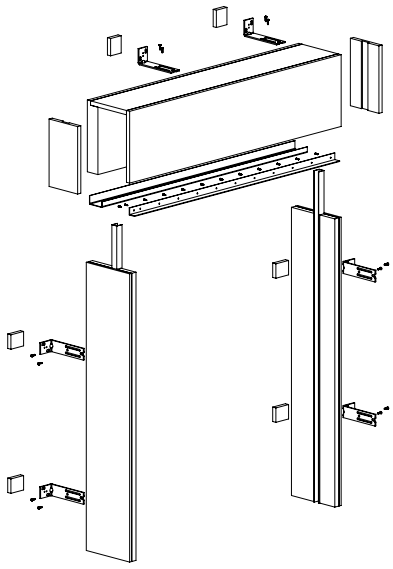

Box: ISOTRA PB-IS 2-01905-0000
surround: PIO - Purenit insulation jambs

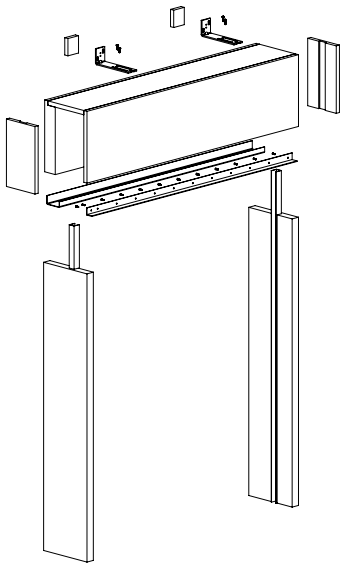

Box: ISOTRA PB-IS 2-01905-0000
surround: SIO - Polystyrene jambs

Item designation	Drawing number - abbreviation 1
Purenit 2440x1220x15 mm	6-018994-0015
Puren PIR MV 2400x600x20 mm	6-019447-0020
Puren PIR MV 2400x600x30 mm	6-019447-0030
Puren PIR MV 2400x600x40 mm	6-019447-0040
Puren PIR MV 2400x600x50 mm	6-019447-0050
Puren PIR MV 2400x600x60 mm	6-019447-0060
U plate 23 x 30 mm	3-04314-PU11
U plate 30 (PIR20) - RAL	3-04806-PU11
U plate 40 (PIR30) – RAL	3-04343-PU11
U plate 50 (PIR40) – RAL	3-04344-PU11
U plate 60 (PIR50) - RAL	3-04318-PU11
U plate 70 (PIR60) – RAL	3-04345-PU11
U plate 80 (PIR70) - RAL	3-04879-PU11
U plate 90 (PIR80) - RAL	3-04880-PU11
U plate 100 (PIR90) - RAL	3-04881-PU11
U plate 110 (PIR100) - RAL	3-04882-PU11
Chipboard screw 3x16 mm, A2-countersunk - torx	6-019122-0000
Short mounting bracket	3-04424-PU22
Long mounting bracket	3-04425-PU22
Screw 5x16 torx galvanized cylinder head low	6-019690-0000
Screw 4,5x12 torx galvanized, cylinder head low	6-019691-0000
Non-isosceles AL-profile - L, 20x20x2	6-013663-0000
Non-isosceles AL-profile - L, 25x25x2	6-018990-0025
Non-isosceles AL-profile - L, 30x20x2	6-015787-0000
Non-isosceles AL-profile - L, 35x35x2	6-018990-0035
Non-isosceles AL-profile - L, 40x20x2	6-005715-0003
Isosceles AL-profile - L, 45x45x1,8	6-018990-0045
Mounting purenit washer	3-04483-0000
Connector for purenit boxes	2-01841-0000
Holders for EXTERIOR BLINDS	2-00649-0000
Hex socket head screw with convex head with flange M6x16 Zn	6-010244-0000
Drill nut for wood M6x13	6-019854-0000

Variants of Purenitboxes

ISOTRA PB

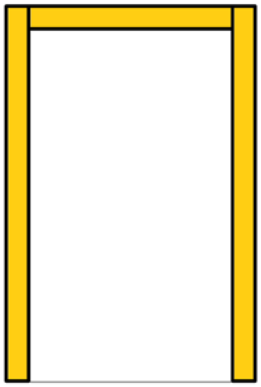

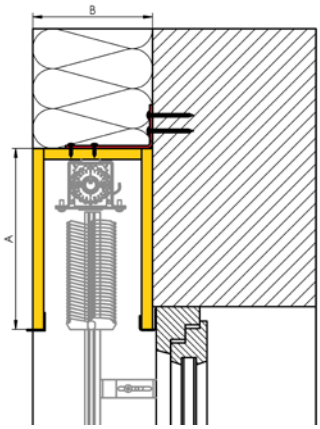

ISOTRA PB-IS

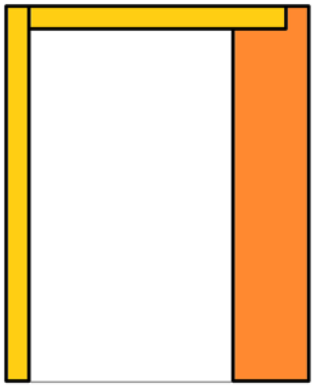

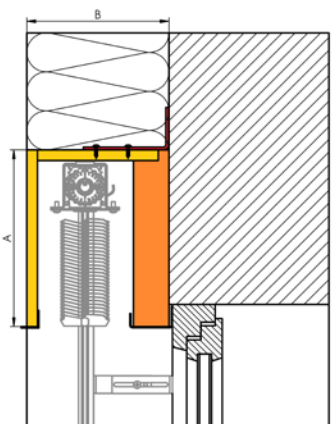

ISOTRA PB-L

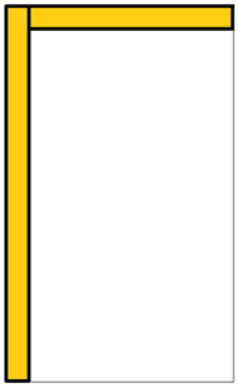

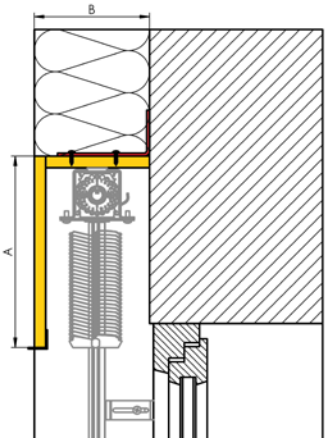

Composition of Purenit boxes

- Purenit - front side of the box (we can freely anchor consoles and brackets of blinds into it)
- Insulation - back side of the box (adjacent to the lintel, connection gap and window frame)
- Mounting U profile

	Dimensions
Type	**B1**
ISOTRA PB	15
ISOTRA PB-IS 20	20
ISOTRA PB-IS 30	30
ISOTRA PB-IS 40	40
ISOTRA PB-IS 50	50
ISOTRA PB-IS 60	60

Up to the box length of 3,500 mm, the base profile is supplied as one piece. From the length of 3,501 mm, the box is divided into individual sections with each section having a separate base profile. The profiles are of such a length that at least one profile extends into the next section, ensuring the sections overlap and their connection is reinforced.

- Underplaster rail

	Dimensions		
Type	**H1**	**H2**	**J**
20	20	20	3
25	25	25	8
30	30	20	13
35	35	35	18
40	40	20	23
45	45	45	28

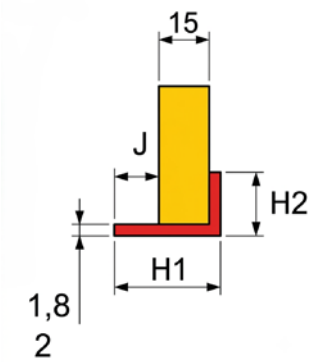

Up to the box length of 3,500 mm, the under-plaster built-in board is supplied as one piece. From the length of 3,501 mm, the box is divided into individual sections with each section having a separate under-plaster built-in board. The boards are of such a length that at least one board extends into the next section, ensuring the sections overlap and their connection is reinforced.

THICKNESS of PIR* insulation (for type PBI)	**20**	**30**	**40**	**50**	**60**
Thermal resistance RD [(m^2·K)/W]	0,20	0,35	0,45	0,55	0,70
Thermal transmittance [2)] UD [(m^2·K)/W]	2,94	2,04	1,69	1,45	1,19
Diffusion resistance Sd [m]	0,16	0,24	0,32	0,40	0,48

*PIR = Polyisocyanurate foam

Type of spray-coating:

A) only mounting profile

B) both mounting and under-plaster profile

C) only under-plaster profile

Colours offered according to the RAL sample book for exterior blinds. The inside of the box is painted grey in colors 7016 or 7038.

Mounting bracket

Short mounting bracket (3-04424-PU22)

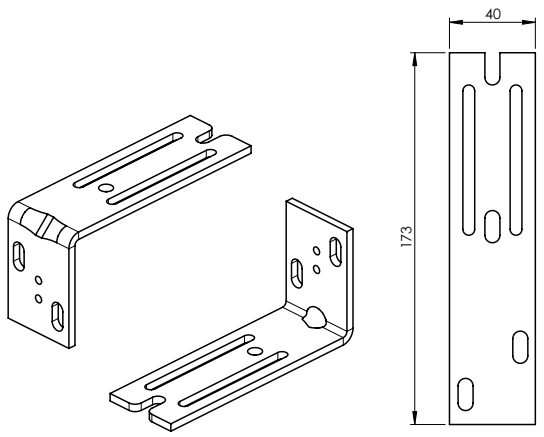

Long mounting bracket (3-04425-PU22)

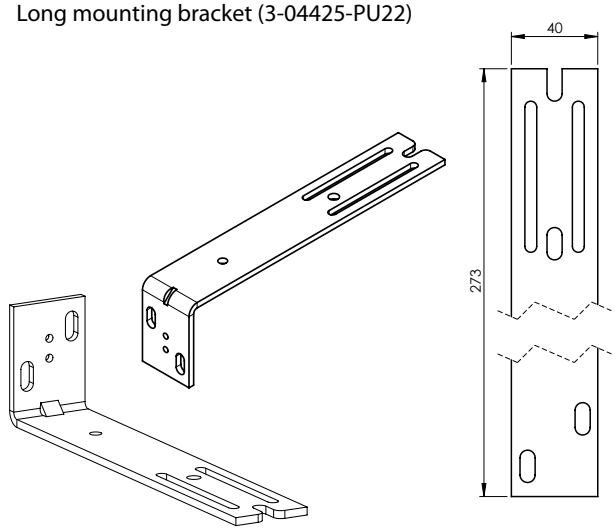

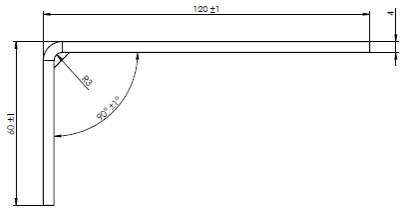

Recommended quantity of holders per Purenit box

Purenit box width (mm)	Quantity
< **1199**	**2**
1200 - 1999	3
2000 - 2799	4
2800 - 3599	5
3600 - 4399	6
4400 - 5199	7
5200 - 6000	8

Longitudinal section of the box

(minimum number of brackets recommended)

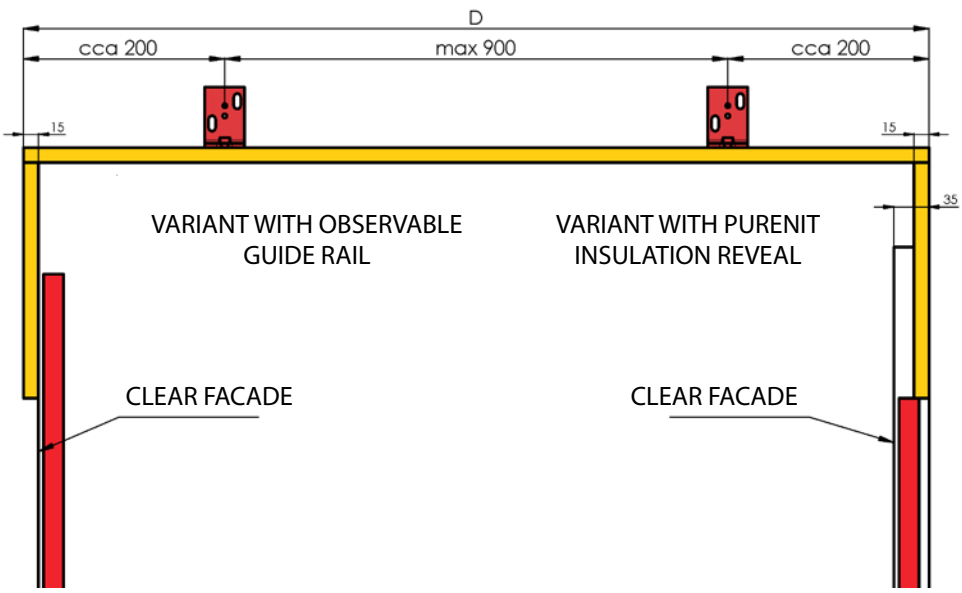

Order the guide rail casing and the guide rail together with the external blind.

Connection of Purenit boxes

1. Longitudinal connection of the boxes

Boxes longer than 3500 mm are assembled from multiple pieces, the connection is made using a Purenit box connector. It is up to you to make decision about division of the boxes or the set. In this case, it is necessary to complete the order form with a simple drawing from the exterior, otherwise it will be automatically divided into elements 3500 mm long + an allowance for the specified dimension.

Connector for purenit boxes 2-01841-XXXX-1

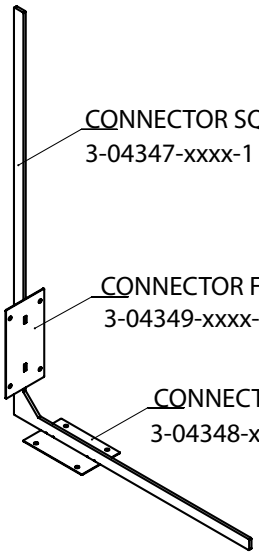

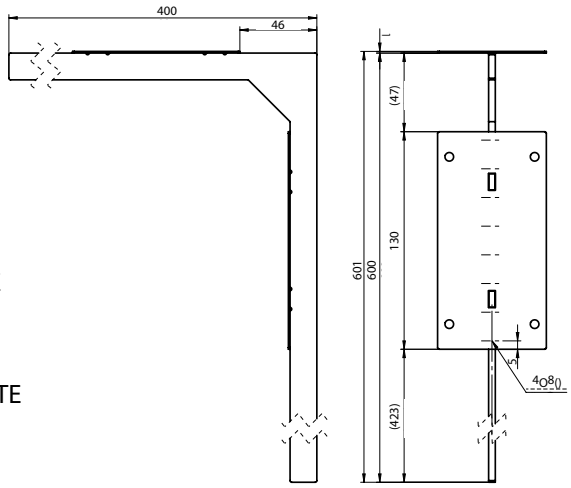

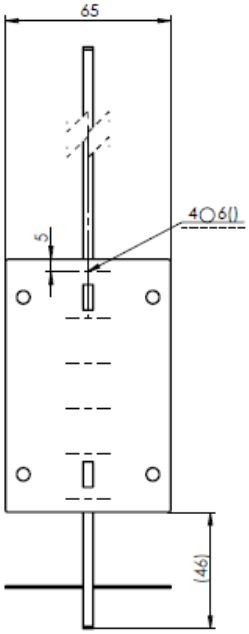

2. Connecting the box to the reveal option

Connector box - reveal 3-04499-PU22
can be ordered as an optional accessory

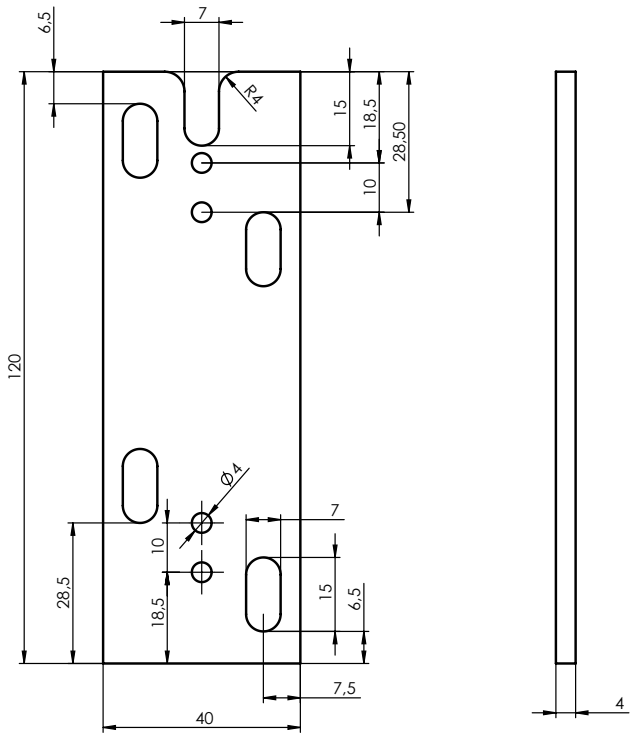

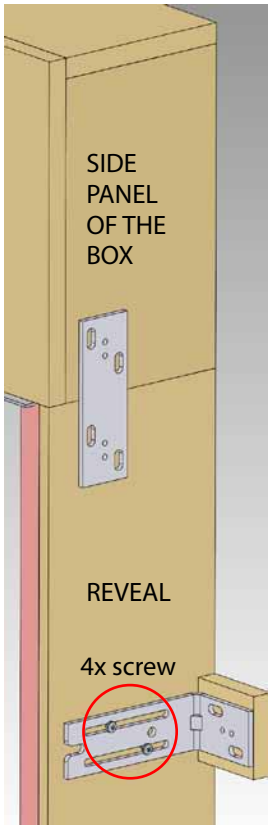

3. Corner connection of the boxes

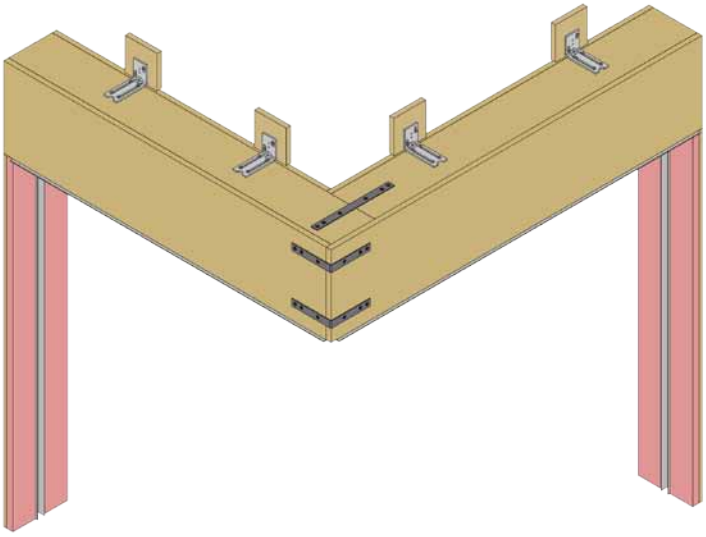

Please specify the external dimensions of the assembly and attach a drawing.

The corner assembly is supplied with a connecting set of connectors and angles.

Corner connector for purenit boxes - angle 3-04611-PU22, 2x

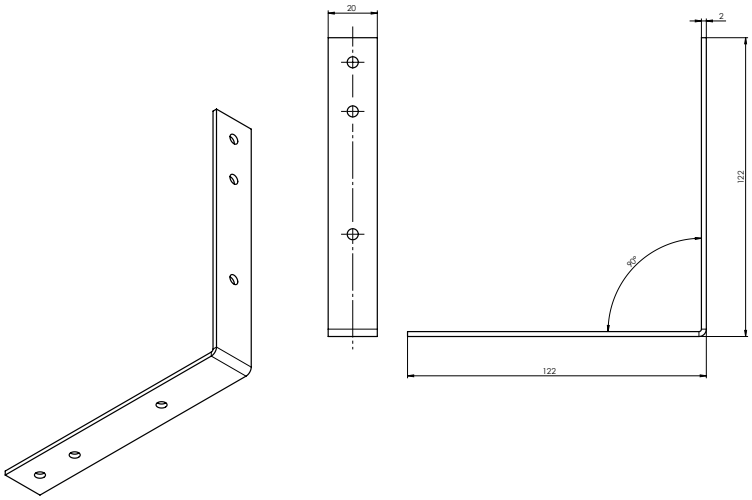

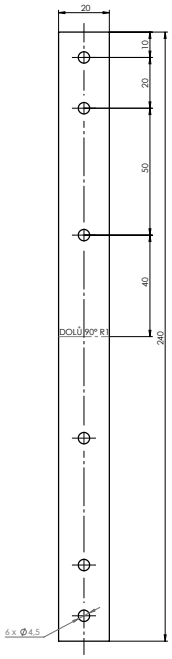

Corner connector for purenit boxes - belt 3-04612-PU22, 1x

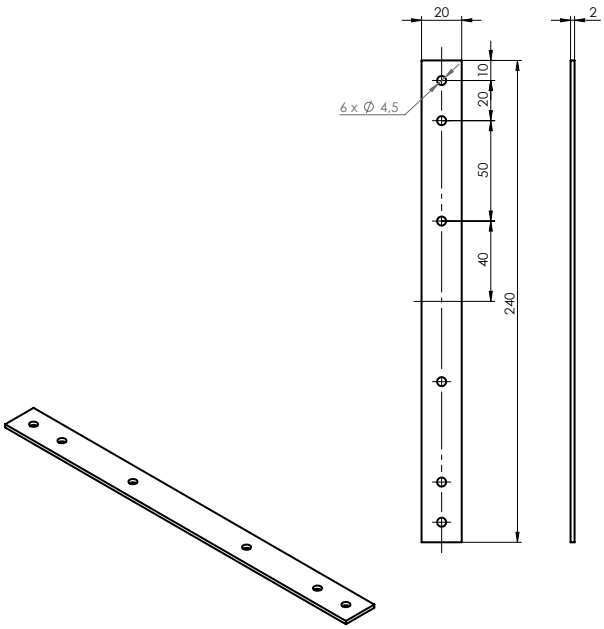

Corner purenit box - outside corner

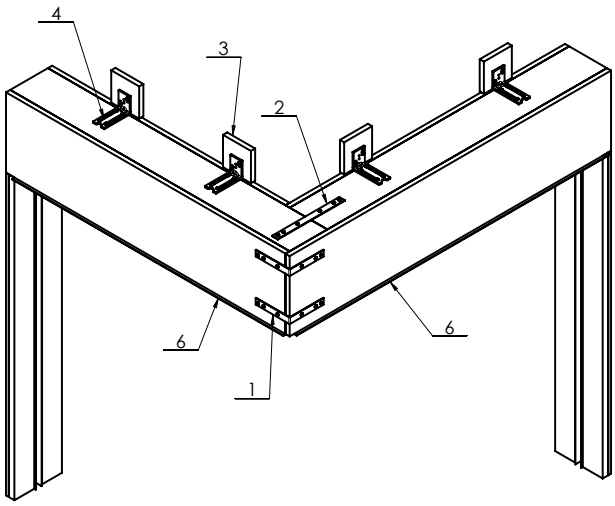

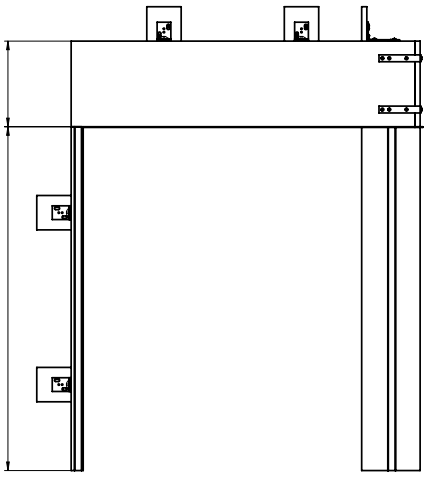

Corner purenit box - inside corner

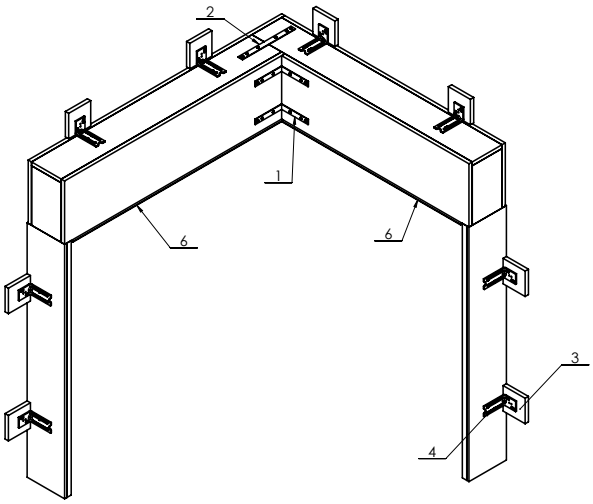

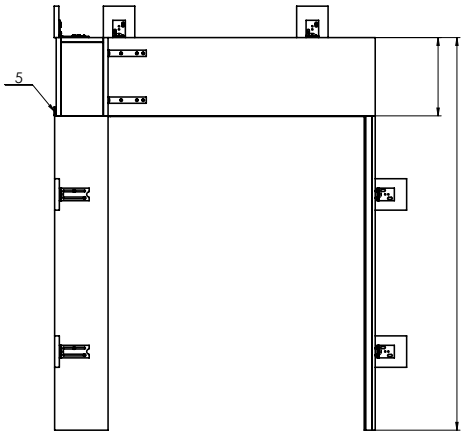

Corner purenit box 2-01884-0000

Item name	Order number - Abbreviation 1
Isosceles AL-profile - L, 20x20x2	6-013663-0000
Isosceles AL-profile - L, 25x25x2	6-018990-0025
Isosceles AL-profile - L, 35x35x2	6-018990-0035
Isosceles AL-profile - L, 45x45x1,8	6-018990-0045
Non-isosceles AL-profile - L, 30x20x2	6-015787-0000
Non-isosceles AL-profile - L, 40x20x2	6-005715-0003
U plate 23x30 mm	3-04314-PU11
U plate 30 (PIR20) - RAL	3-04806-PU11.
U plate 40 (PIR30) - RAL	3-04343-PU11.
U plate 50 (PIR40) - RAL	3-04344-PU11.
U plate 60 (PIR50)-RAL	3-04318-PU11.
U plate 70 (PIR60) - RAL	3-04345-PU11.
U plate 80 (PIR70) - RAL	3-04879-PU11
U plate 90 (PIR80) - RAL	3-04880-PU11
U plate 100 (PIR90) - RAL	3-04881-PU11
U plate 110 (PIR100) - RAL	3-04882-PU11
Mounting purenit washer	3-04483-0000
Corner connector for purenit boxes - belt	3-04612-PU22
Corner connector for purenit boxes - angle	3-04611-PU22
Short mounting bracket	3-04424-PU22
Long mounting bracket	3-04425-PU22

Prefabricated insulated lining:

Prefabricated insulated lining is made of a 30 mm thick sandwich of purenit and XPS (extruded polystyrene) - 10 mm purenit as a supporting part, 20 mm XPS as insulation), the blind casing has a depth of 25 mm. The casing protrudes 5 mm from the sandwich.

Properties of the lining:

- Heat insulation – provides high heat insulation
- High strength – withstands mechanical loads
- Easy to work with – can be connected as needed

Assembly

- On brackets mechanically anchored to the window frame
- Surface gluing to vertically aligned surface of the contact insulation

STANDARD DIMENSIONS (mm)					
Dimension A		**Dimension B**		**Dimension C**	
Min.	Max.	Min.	Max.	Min.	Max.
150	3200	75	306	65	235

*This is the size of the PIO or SIO insulation reveal without the overhang of the 150 mm housing.

Types of lining

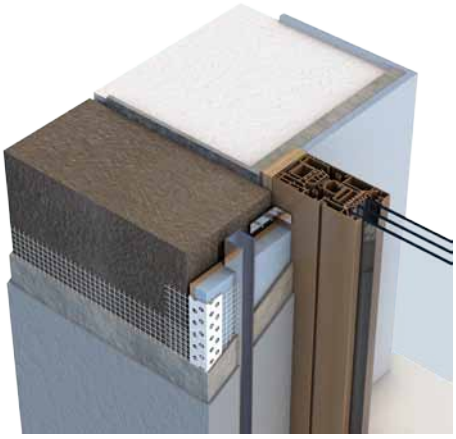

PIO - Purenit insulation reveal

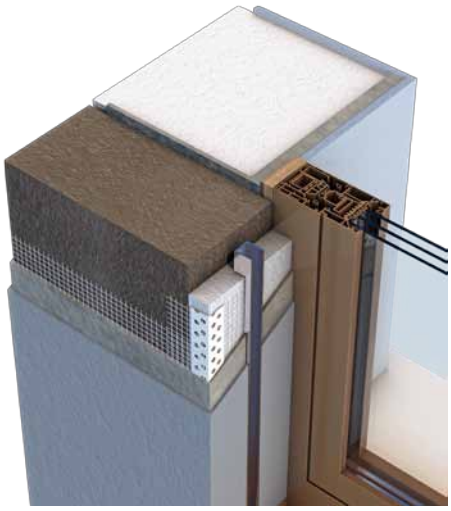

SIO - Polystyrene reveal

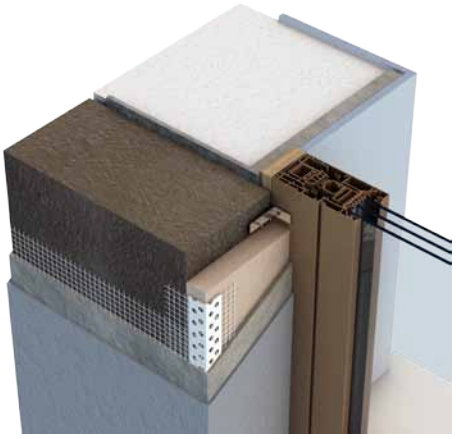

PUR - Purenit reveal

Reccomended quantity of holders

Purenit reveal height (mm)	Quantity
< **1799**	**2**
1800 - 2799	3
2800 - 4000	4
4001 - 5000	5

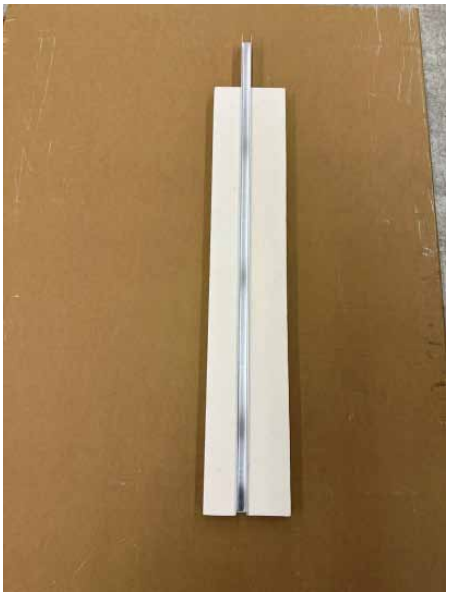

Purenit insulation reveal (PIO)

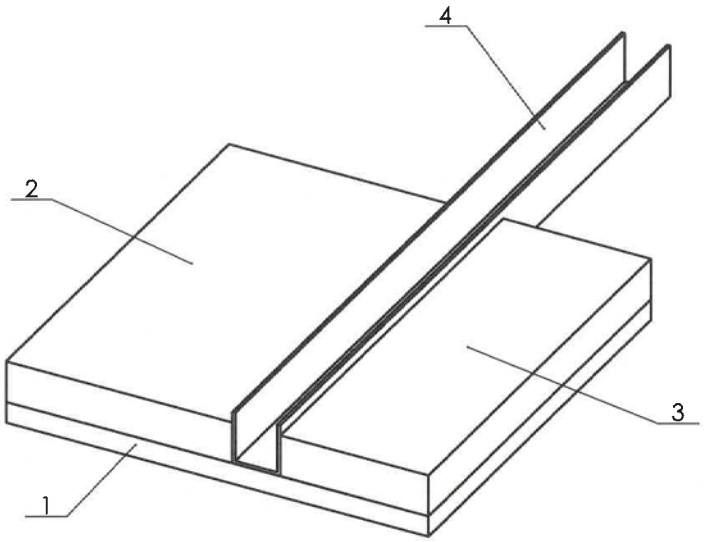

1 Purenit
2 Polystyrene foam
3 Polystyrene foam
4 23x25 casing

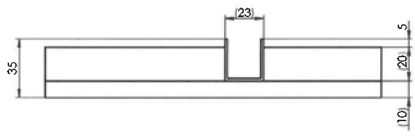

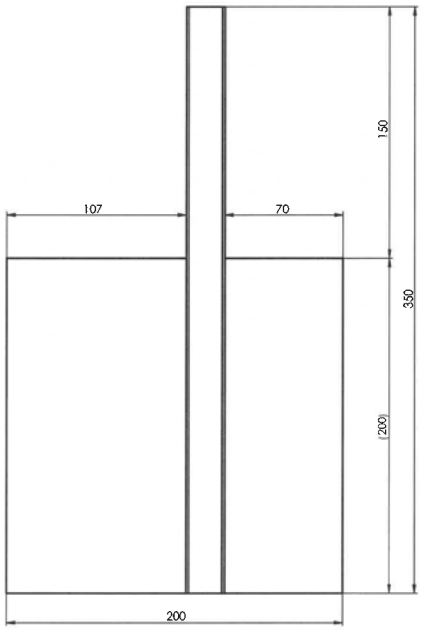

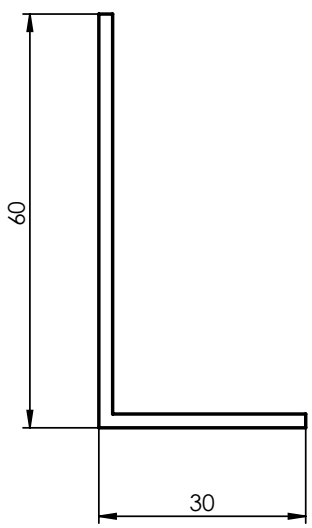

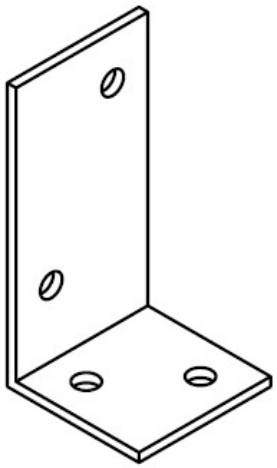

Console 60x30 (3-04563-xxxx-0)

Polystyrene reveal (SIO)

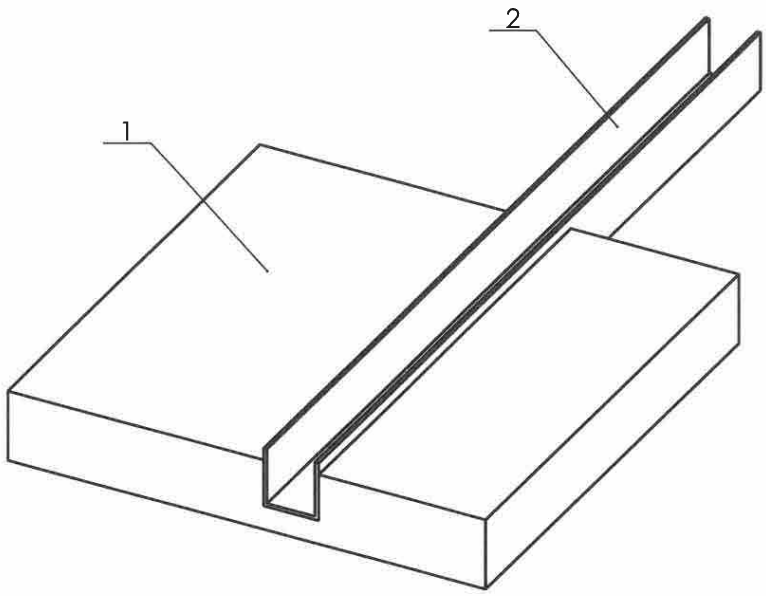

1 POLYSTYRENE
2 23X25 CASING

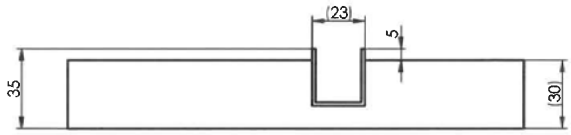

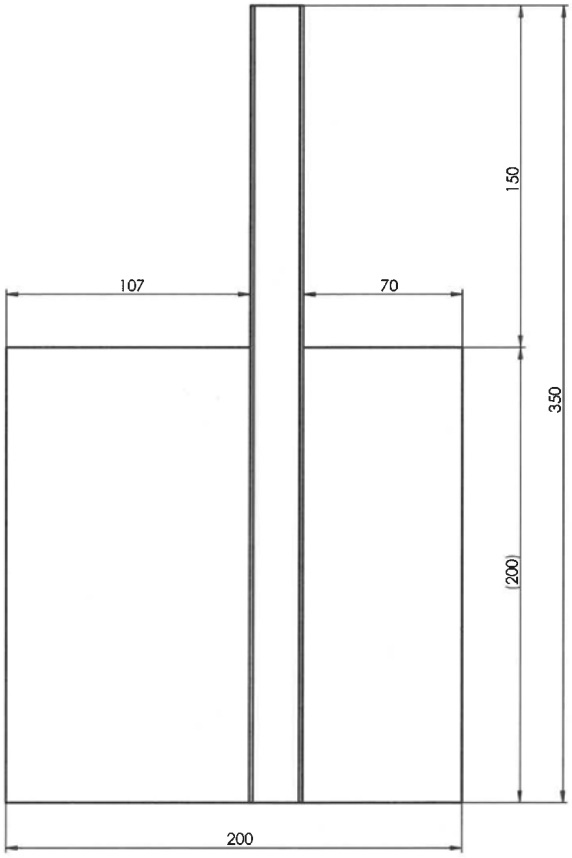

CASINGS CAN BE STANDARDLY FITTED WITH P018/3 INSERT (7-302234-PU52)

Measurement and installation instructions

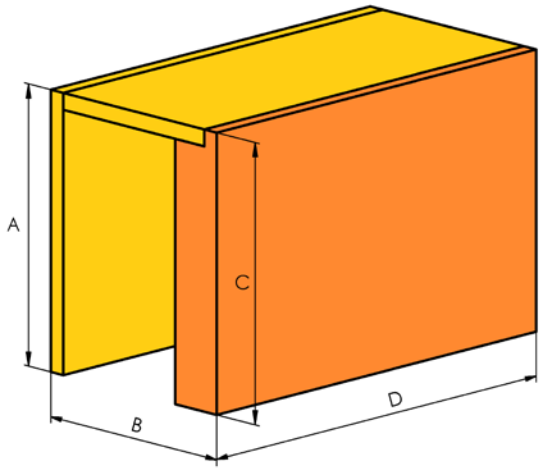

1. Box measurement

A - external height of the front side of the box
B - external depth of the box B =15+E+B1
C - external height of the back side of the box (may differ from A)
D - external length of the box (see fig. 2)
E - internal depth of the box (for most types of blinds it is 130 mm)
B1 - thickness of PIR insulation
External dimensions of the boxes are always measured and entered.

2. Installation of boxes

The installation may only be carried out by qualified professionals!
Construction ready for installation: fitted windows.

Inspection:

- Before installation, we recommend checking all parts upon delivery of the goods, in order to avoid possible problems. Provided there are any deficiencies or comments regarding the installation or the blinds themselves, please inform the manufacturer.

Tools for installation:

1. Spirit level
2. Pencil
3. Tape measure
4. Drilling-machine + drill bits according to the instructions
5. Hammer
6. Cordless drilling-machine
7. Bits according to the selected screws, magnetic attachment for 8 and 10 hexagonal head
8. Magnetic attachment
9. 4x15 mm screw into Purenit
10. 3x15 mm screw into Purenit
11. Diameter 10 plastic anchor, 5x60 mm screw

The system is prepared so that the base profile (and the insulation inserted in it) can cover 30 mm of the window frame from the top side.

Installation procedure:

1. Preparation

Purenit under-plaster boxes or insulation reveals are delivered wrapped in foil with position marking based on your order.
The mounting brackets together with other mounting components are packed in the box.
After unpacking, check the dimensions of the individual positions of the order.

2. Installation of the base profile

Place the profile against the window frame so that the longer side (30 mm) of the profile is in line with the upper external edge of the window frame, or adjust the height according to the agreement with the construction company. The base profile should have a distance of 15 mm on each side. In this position, attach the base profile to the window frame or base using screws.

3. Place the Purenit box on the anchored base rail, align it vertically with a spirit level.

4. Anchor the box to the base using mounting brackets

- First, anchor a bracket to the given supporting base

5. Use a spirit level to align it vertically and screw the box to the brackets.

6. Finish the installation by pulling the blinds' power cable into the box space.

- Using a 10 mm drill bit for wood or metal, drill a hole in the location where the exterior blind motor will be located. Then pull the cable through this hole into the interior of the box.

To prevent a heat bridge, we recommend placing a Purenit washer under the console foot. This washer can be ordered by adding a note to the order.

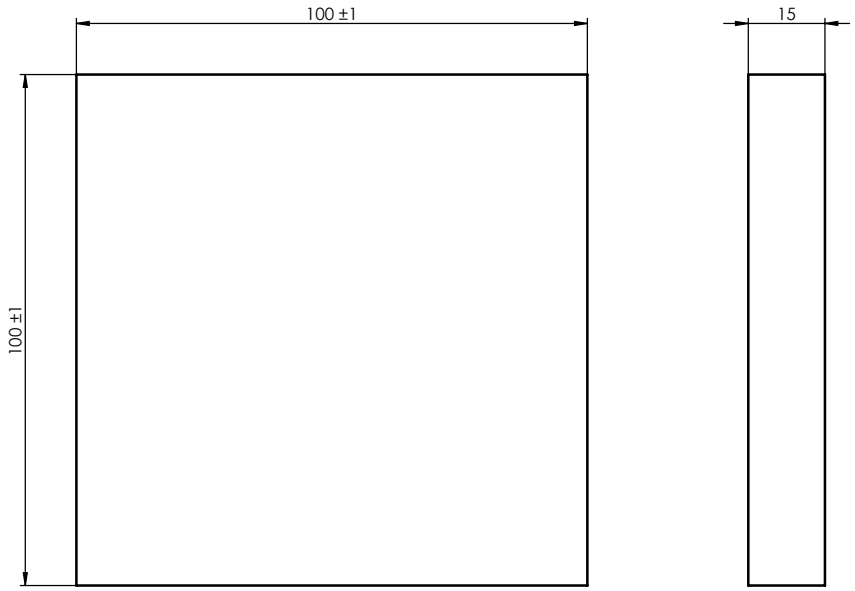

Mounting Purenit washer 3-04483-0000

We always place the console 200 mm from each edge, and the other ones evenly 500 - 600 mm from each other.

BASIC DIMENSIONS OF BOXES AND CALCULATION OF THE GUIDE RAIL AXIS

PB-IS with a base profile

- B1 – PIR insulation thickness
- Y – base profile depth

SIZE B1 [mm]	BASE PROFILE DEPTH Y [mm]
20	30 – 40 – 50 – 60 – 70 – 80 – 90 – 100 – 110
30	40 – 50 – 60 – 70 – 80 – 90 – 100 – 110
40	50 – 60 – 70 – 80 – 90 – 100 – 110
50	60 – 70 – 80 – 90 – 100 – 110
60	70 – 80 – 90 – 100 – 110

1.5 mm sheet thickness is used for the base profile depths of 20 to 60 mm; 2.0 mm sheet thickness is used for the base profile depths of 70 to 100

- X – distance between the guide rail axis and the rear wall of the base profile

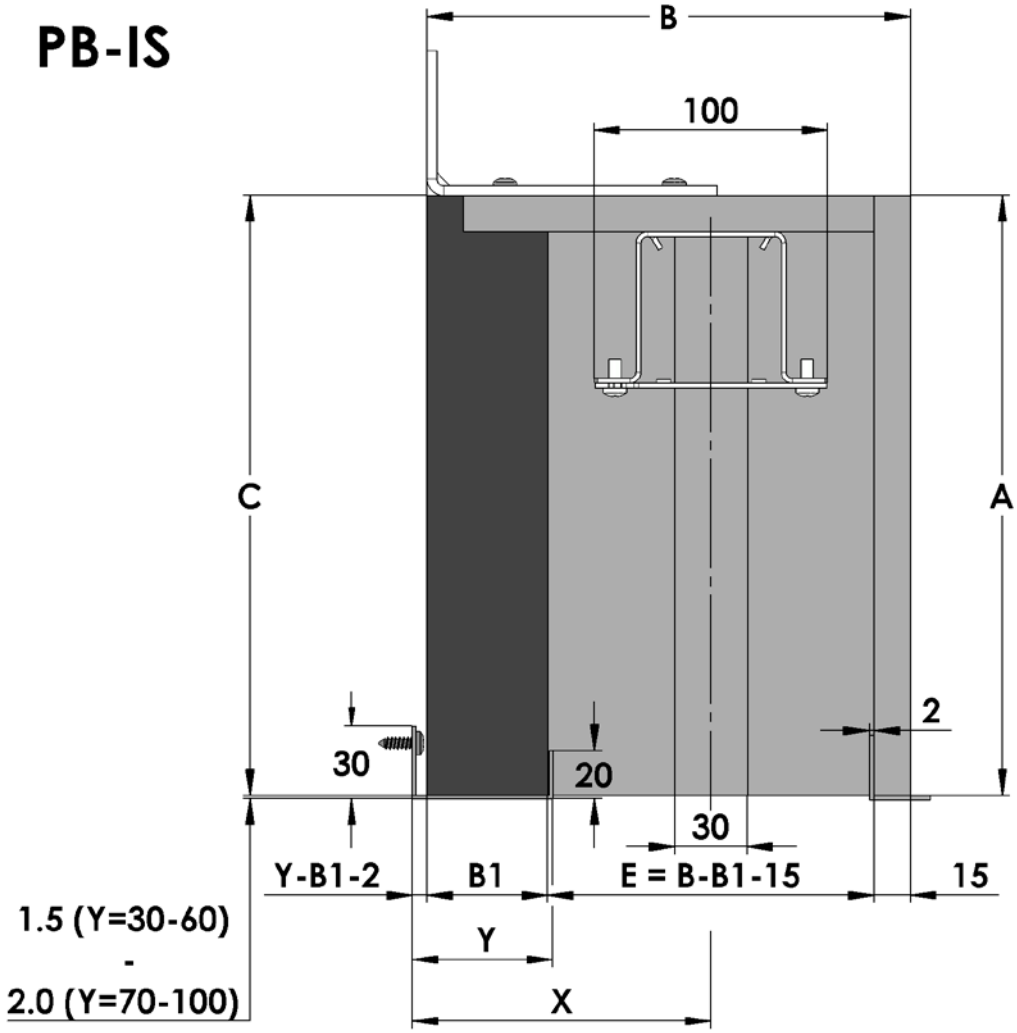

Calculation of the guide rail axis (mm):

X = 0,5 * E + Y - 2

PB-IS without a base profile

- B1 – PIR insulation thickness
- X – distance between the guide rail axis and the **notional*** rear wall of the base profile

* If "NO" is selected for the base profile (i.e., without a base profile), it is presumed that the base profile has already been installed and corresponds to the nearest base profile (e.g., when B1 = 30 mm is selected, the PB-IS 40 profile is presumed). If no base profile is used during installation, or if a profile of a different depth is used, this must be taken into account when configuring the guide rail axis.

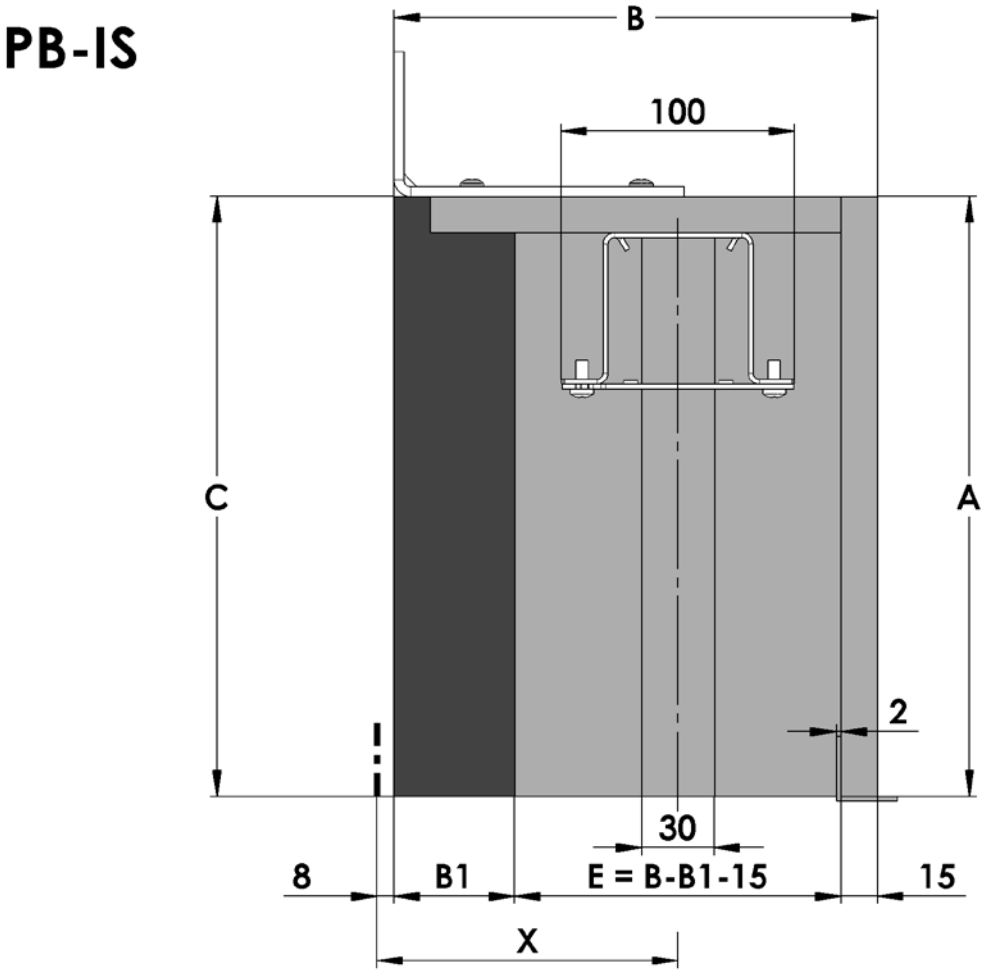

Calculation of the guide rail axis (mm):

X = 0,5 * E + B1 + 8

PB with a base profile

- B1 – Purenit board thickness
- Y – base profile depth

SIZE B1 [mm]	BASE PROFILE DEPTH Y [mm]
15	23 – 30 – 40 – 50 – 60 – 70 – 80 – 90 – 100 – 110

1.5 mm sheet thickness is used for the base profile depths of 23 to 60 mm;
2.0 mm sheet thickness is used for the base profile depths of 70 to 100

- X – distance between the guide rail axis and the rear wall of the base profile

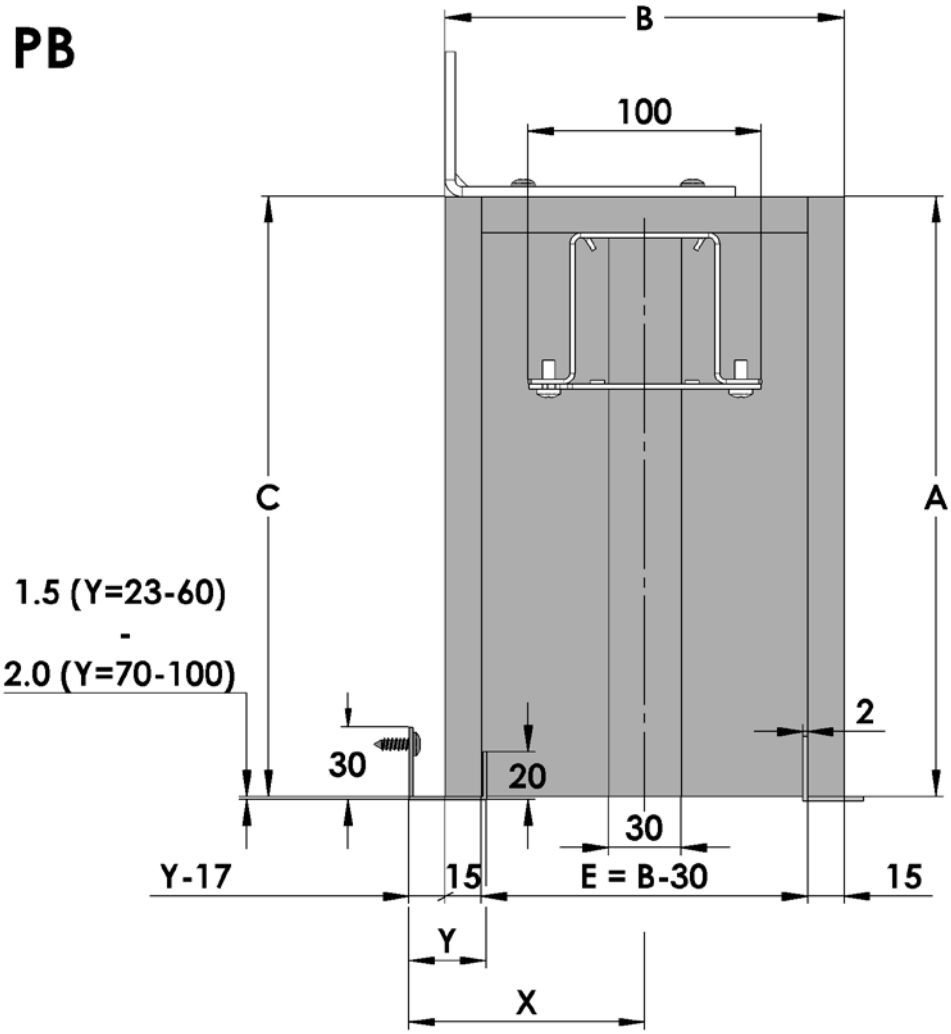

Calculation of VL axis [mm]:
X=0.5·E+Y-2

PB without a base profile

- X – distance between the guide rail axis and the **notional*** rear wall of the base profile

* If "NO" is selected for the base profile (i.e., without a base profile), it is presumed that the base profile has already been installed and corresponds to the nearest base profile (for PB, the minimum profile depth is 23 mm). If no base profile is used during installation, or if a profile of a different depth is used, this must be taken into account when configuring the guide rail axis.

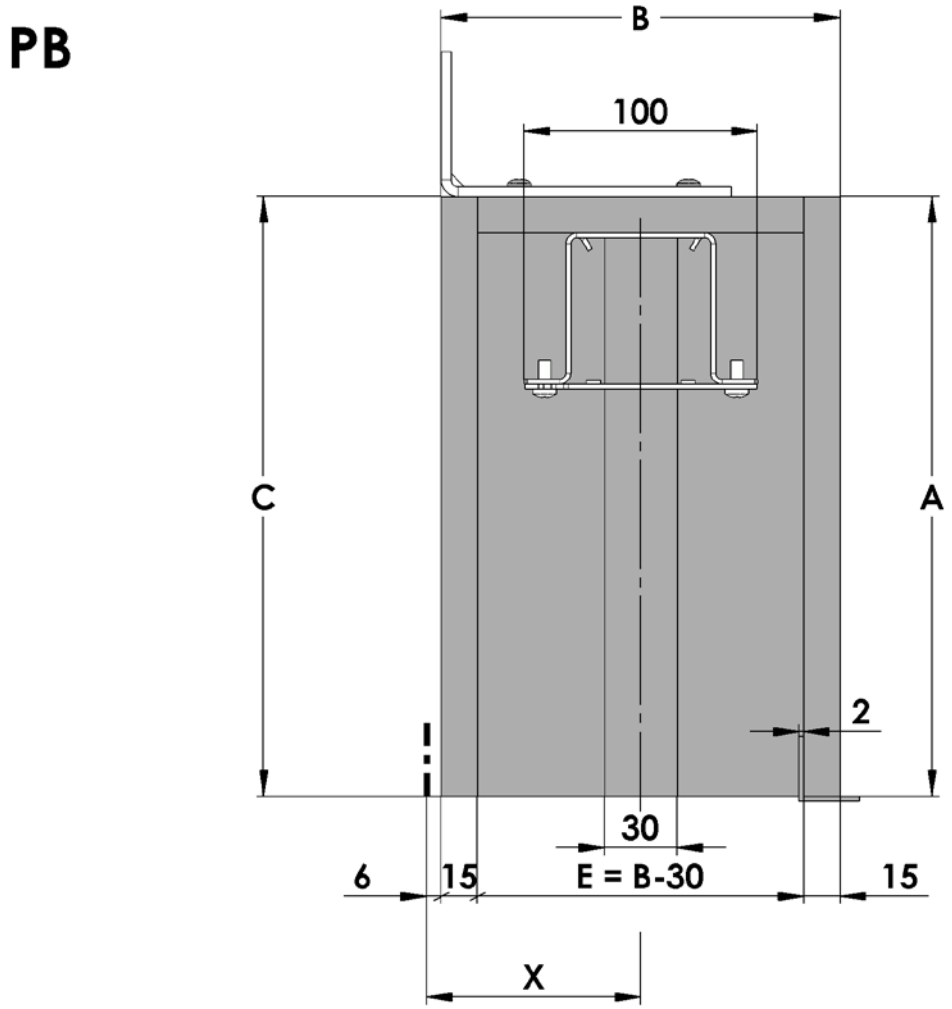

Calculation of the guide rail axis (mm):

X = 0,5 * E + 21

PB-L with a base profile

- X – distance between the guide rail axis and the rear edge of the box

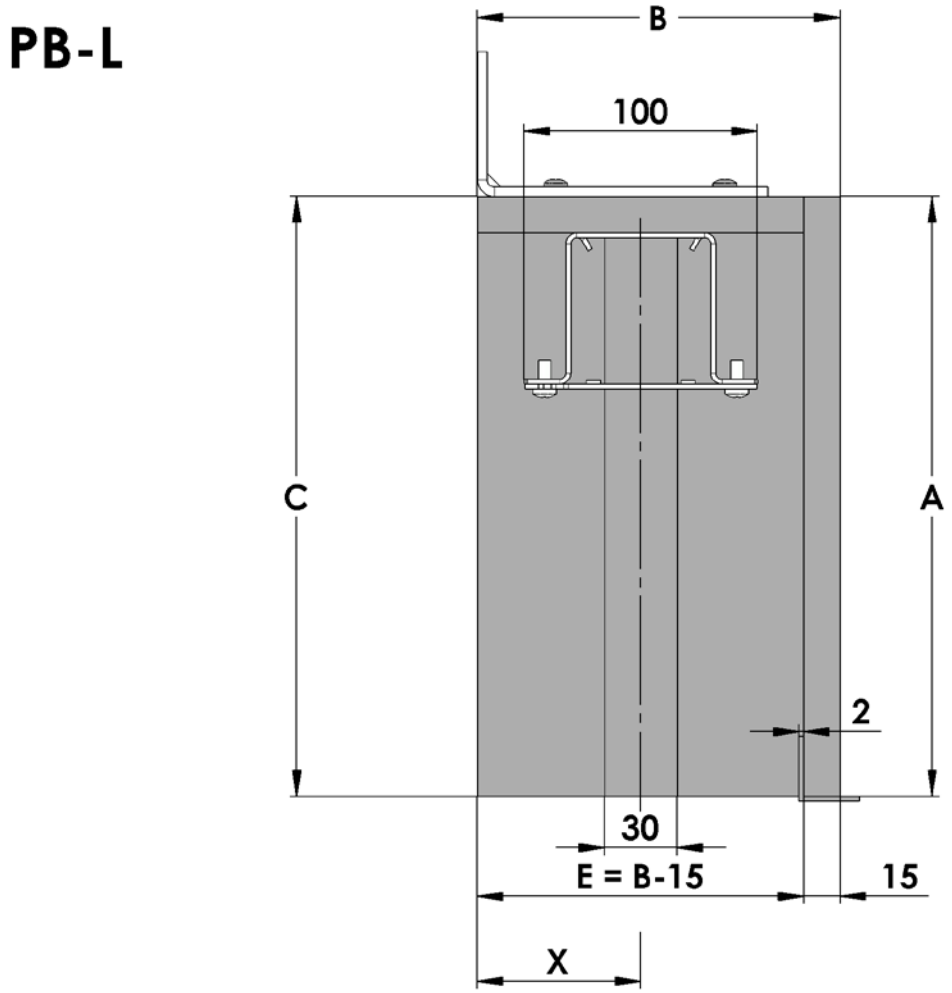

Calculation of the guide rail axis (mm):
X = 0,5 * E

Minimum depth E - space for blinds according to the type of slat

Type of blinds	Min. dimension E
CETTA 50	90 mm
CETTA 65	115 mm
CETTA 80	130 mm
CETTA 60F	100 mm
CETTA 80F	120 mm
CETTA 100F	140 mm
SETTA 65	115 mm
SETTA 90	140 mm
ZETTA 70	120 mm
ZETTA 90	140 mm

Mounting the Prefabricated insulated lining

1. Unpack the reveal and prepare it for installation.

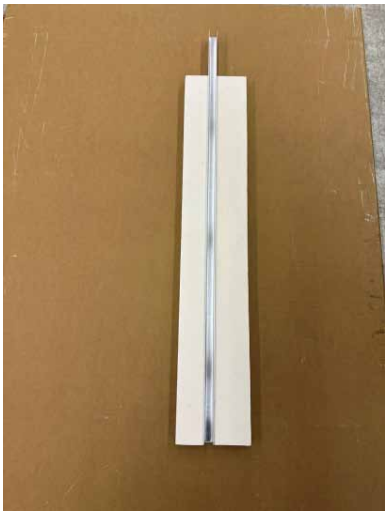

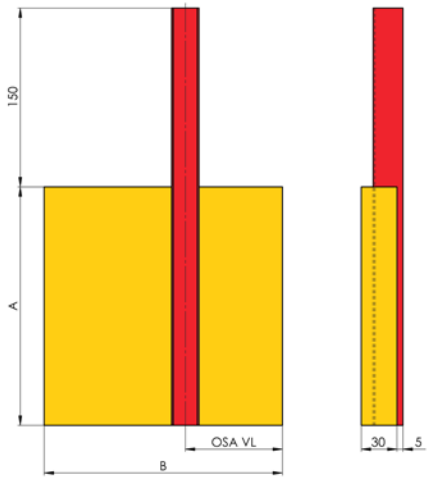

2. Start by installing the squares on the prepared base according to the measurements. For one reveal, use 2-3 squares depending on its length. Place the first square approximately 300 mm from the base profile. Then, place the second one approx. 300 mm from the bottom edge of the window.
3. Place the reveal on the prepared brackets and anchor with screws. Within strengthened and stabilization, you can use a spike to anchor the guide rail casing inside the box to the side panel.

As an alternative, we also offer the SIR reveal, which is made only of polystyrene with an insert for the guide rail. The installation is carried out by gluing it using foam adhesives to the prepared KZS (structural insulation system).

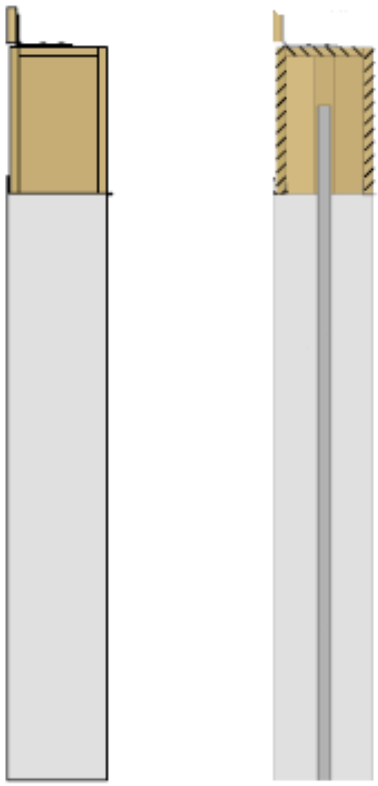

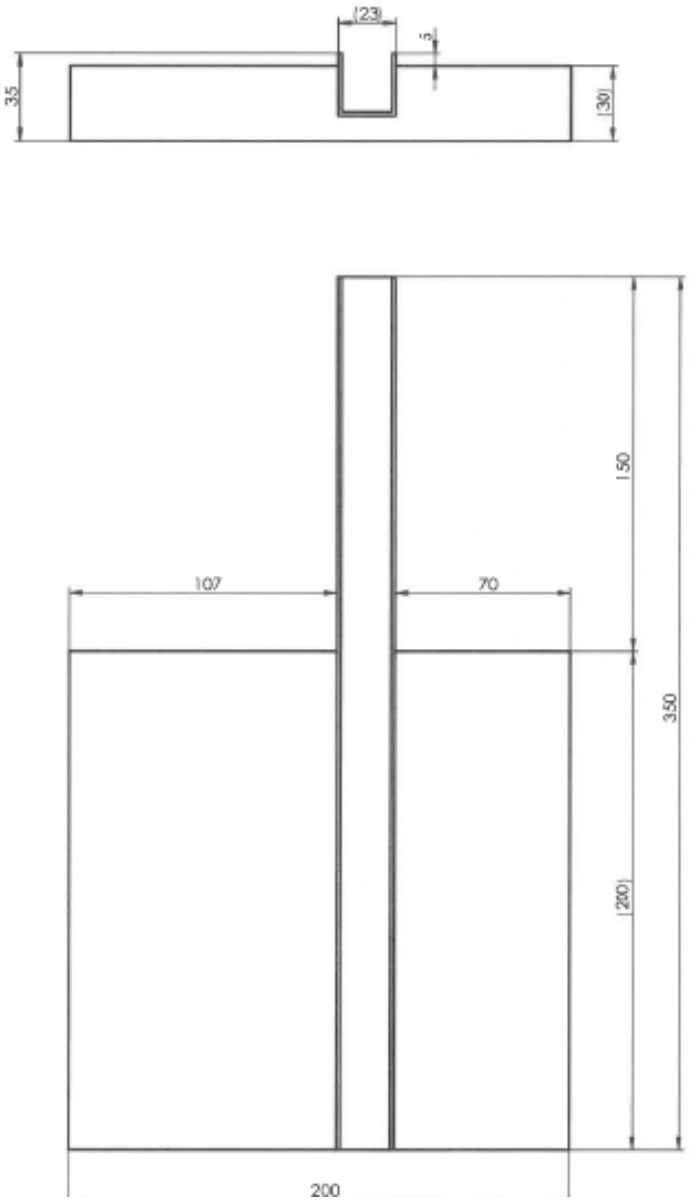

Recommendation: treat Purenit with a primer for non-absorbent surfaces before applying the façade. Do not remove the internal reinforcements of the box during installation! These reinforcements can only be removed after the box has been completely embedded in the façade when installing exterior blinds.

Installation conditions:

- The manufacturing tolerance of Purenit boxes is ± 3 mm
- Purenit boxes must be integrated into the insulation no later than 30 days after their installation.
- Boxes must not be exposed to weather conditions for a long time
- Polystyrene spacers must remain inside the box until the box is completely integrated into the facade. They will only be removed during the installation of exterior blinds.
- Before integrating the boxes into the facade, it is necessary to treat their front side with a penetration agent intended for non-absorbent surfaces or apply a contact bridge.
- In case of violation of the above conditions, it is not possible to claim for the products.
- The Purenit box and its fixing points – the brackets – are dimensioned and structurally and statically designed to support the weight of the box itself, including the external venetian blinds, and, where applicable, lightweight thermal insulation. Under no circumstances are the fixings designed to withstand additional heavy loads, such as bonded brick slips, stone cladding, or other heavy building cladding. In such cases, the façade cladding must have its own independent supporting substructure.

Notes:

Notes:

ISOTRA a.s.

Bílovecká 2411/1, 746 01 Opava
Czech Republic

Tel.: **+420 553 685 111**
E-mail: isotra@isotra.cz

www.isotra.com

Released: 10/2026

ISOTRA Partner

...a touch of intimacy.